ECEN 714: DIGITAL INTEGRATED CIRCUIT DESIGN
LAB REPORT - 1

BY: YASHAS BHARADWAJ (UIN - 635009332)

1-Bit Full Adder

1. Schematic:

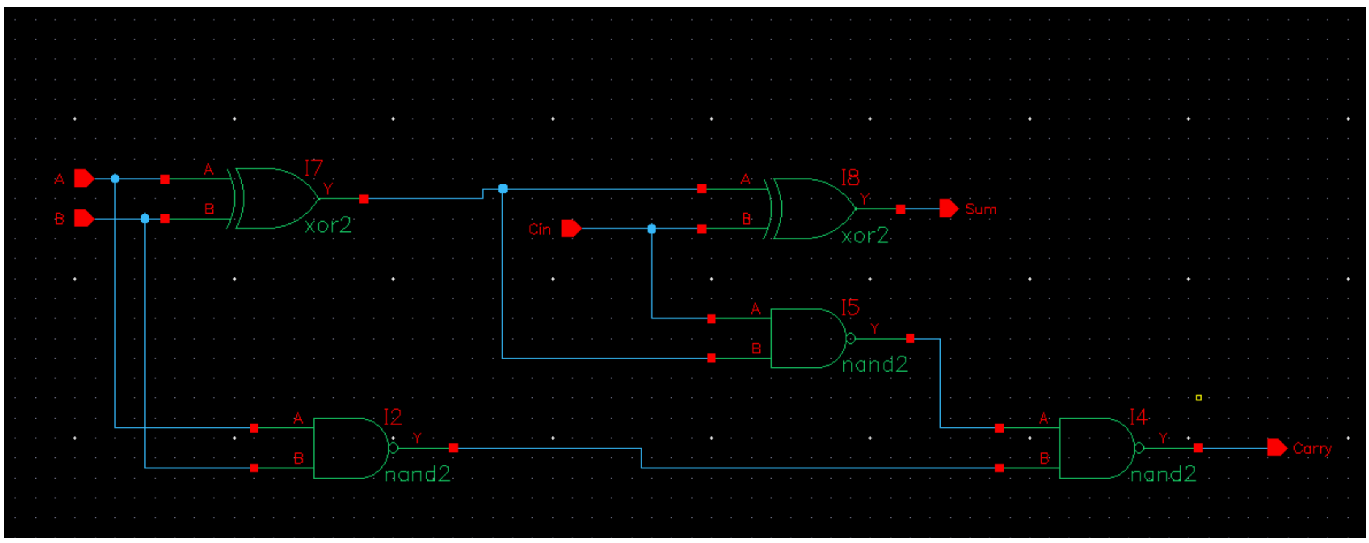

2. Symbol:

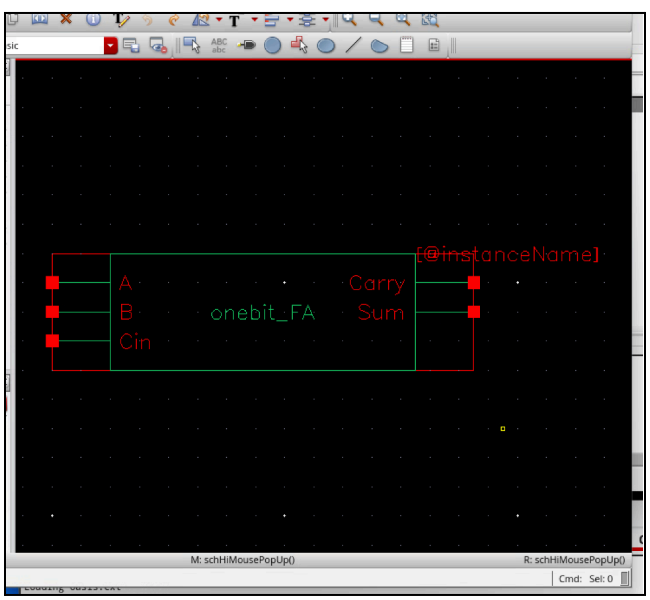

3. Simulation Output & Test Code:

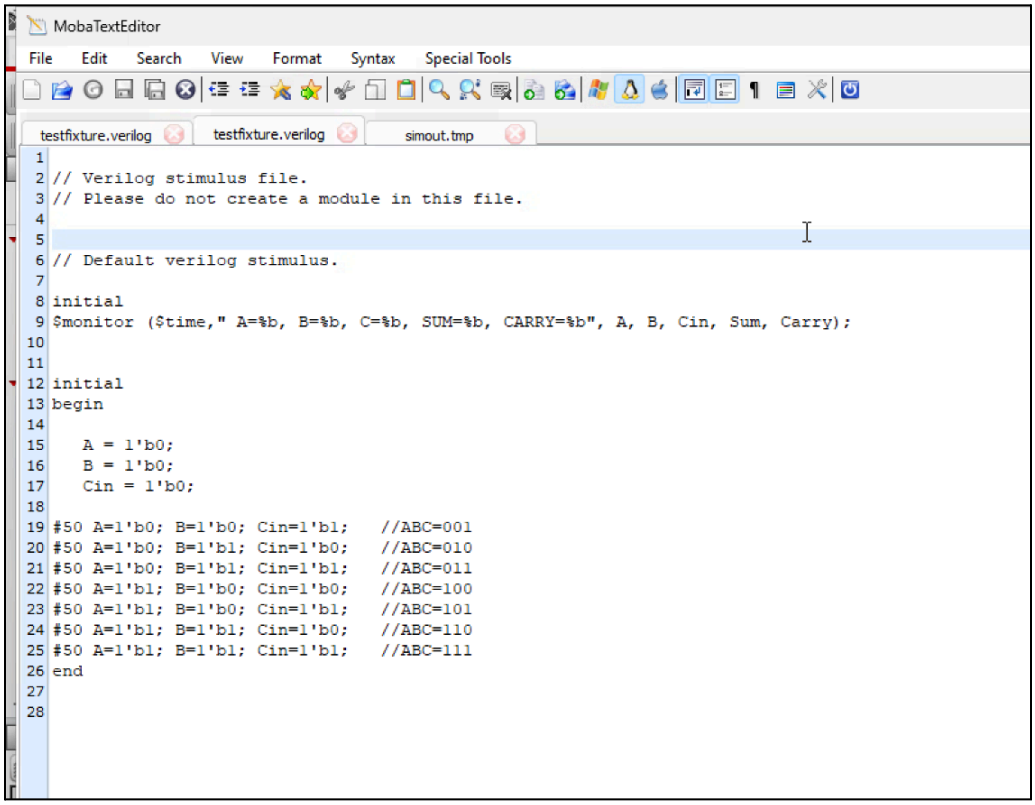


```
// Verilog stimulus file.
// Please do not create a module in this file.


// Default verilog stimulus.

initial
$monitor ($time," A=%b, B=%b, C=%b, SUM=%b, CARRY=%b", A, B, Cin, Sum, Carry);


initial
begin

   A = 1'b0;
   B = 1'b0;
   Cin = 1'b0;

#50 A=1'b0; B=1'b0; Cin=1'b1;   //ABC=001
#50 A=1'b0; B=1'b1; Cin=1'b0;   //ABC=010
#50 A=1'b0; B=1'b1; Cin=1'b1;   //ABC=011
#50 A=1'b1; B=1'b0; Cin=1'b0;   //ABC=100
#50 A=1'b1; B=1'b0; Cin=1'b1;   //ABC=101
#50 A=1'b1; B=1'b1; Cin=1'b0;   //ABC=110
#50 A=1'b1; B=1'b1; Cin=1'b1;   //ABC=111
end
```

Test Fixture

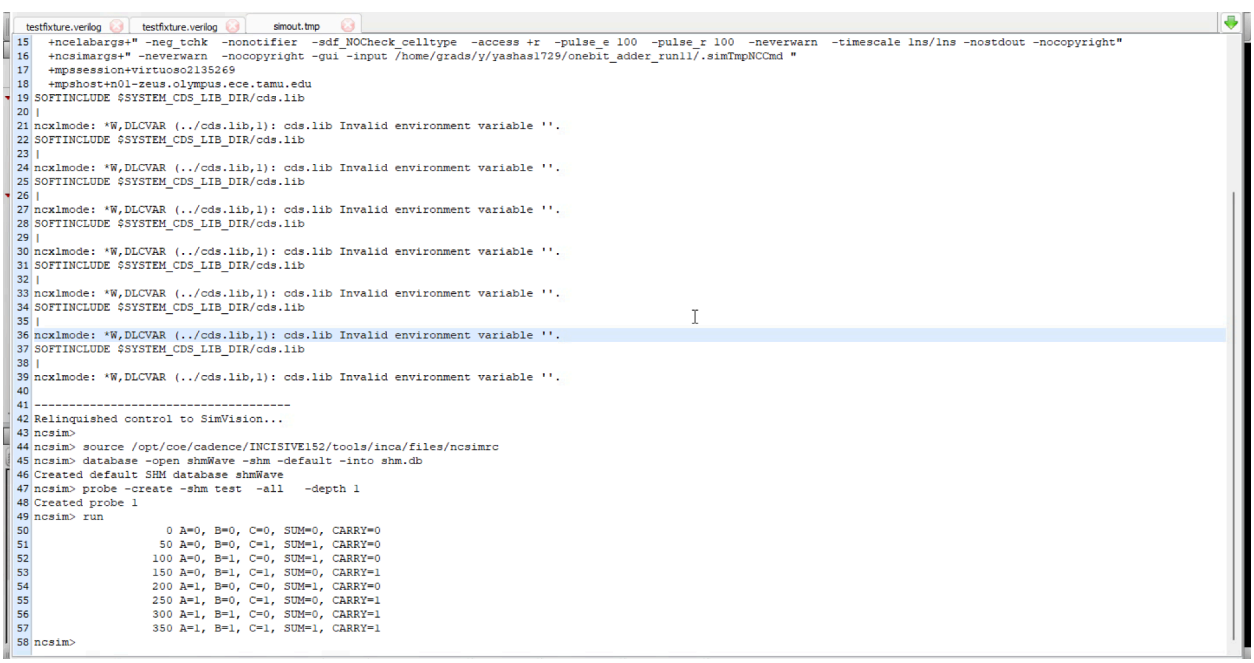


```
  +ncelabargs+" -neg_tchk  -nonotifier  -sdf_NOCheck_celltype  -access +r  -pulse_e 100  -pulse_r 100  -neverwarn  -timescale 1ns/1ns -nostdout -nocopyright"
  +ncsimargs+" -neverwarn  -nocopyright -gui -input /home/grads/y/yashas1729/onebit_adder_run17.simTmpNCCmd "
  +mpssession+virtuoso2135269
  +mpshost+n01-zeus.olympus.ece.tamu.edu
SOFTINCLUDE $SYSTEM_CDS_LIB_DIR/cds.lib
|
ncxlmode: *W,DLCVAR (../cds.lib,1): cds.lib Invalid environment variable ''.
SOFTINCLUDE $SYSTEM_CDS_LIB_DIR/cds.lib
|
ncxlmode: *W,DLCVAR (../cds.lib,1): cds.lib Invalid environment variable ''.
SOFTINCLUDE $SYSTEM_CDS_LIB_DIR/cds.lib
|
ncxlmode: *W,DLCVAR (../cds.lib,1): cds.lib Invalid environment variable ''.
SOFTINCLUDE $SYSTEM_CDS_LIB_DIR/cds.lib
|
ncxlmode: *W,DLCVAR (../cds.lib,1): cds.lib Invalid environment variable ''.
SOFTINCLUDE $SYSTEM_CDS_LIB_DIR/cds.lib
|
ncxlmode: *W,DLCVAR (../cds.lib,1): cds.lib Invalid environment variable ''.
SOFTINCLUDE $SYSTEM_CDS_LIB_DIR/cds.lib
|
ncxlmode: *W,DLCVAR (../cds.lib,1): cds.lib Invalid environment variable ''.
SOFTINCLUDE $SYSTEM_CDS_LIB_DIR/cds.lib
|
ncxlmode: *W,DLCVAR (../cds.lib,1): cds.lib Invalid environment variable ''.

------------------------------------
Relinquished control to SimVision...
ncsim>
ncsim> source /opt/coe/cadence/INCISIVE152/tools/inca/files/ncsimrc
ncsim> database -open shmWave -shm -default -into shm.db
Created default SHM database shmWave
ncsim> probe -create -shm test  -all   -depth 1
Created probe 1
ncsim> run
                   0 A=0, B=0, C=0, SUM=0, CARRY=0
                  50 A=0, B=0, C=1, SUM=1, CARRY=0
                 100 A=0, B=1, C=0, SUM=1, CARRY=0
                 150 A=0, B=1, C=1, SUM=0, CARRY=1
                 200 A=1, B=0, C=0, SUM=1, CARRY=0
                 250 A=1, B=0, C=1, SUM=0, CARRY=1
                 300 A=1, B=1, C=0, SUM=0, CARRY=1
                 350 A=1, B=1, C=1, SUM=1, CARRY=1
ncsim>
```

Simout Picture

4-Bit Full Adder

1. Schematic:

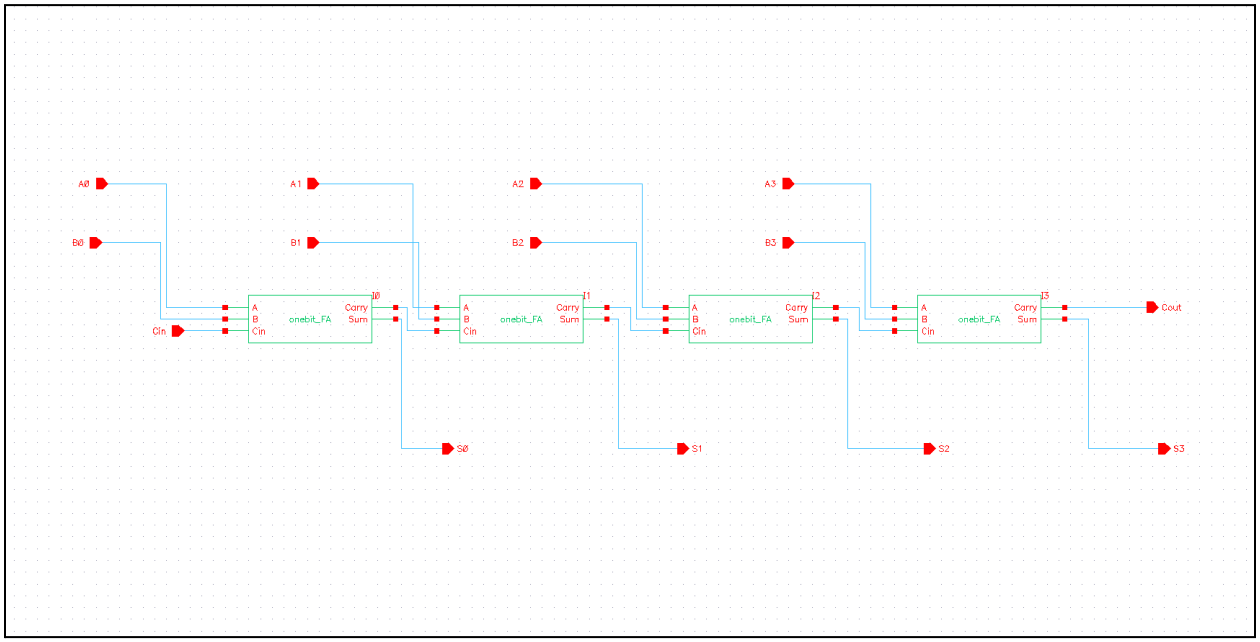

2. Symbol:

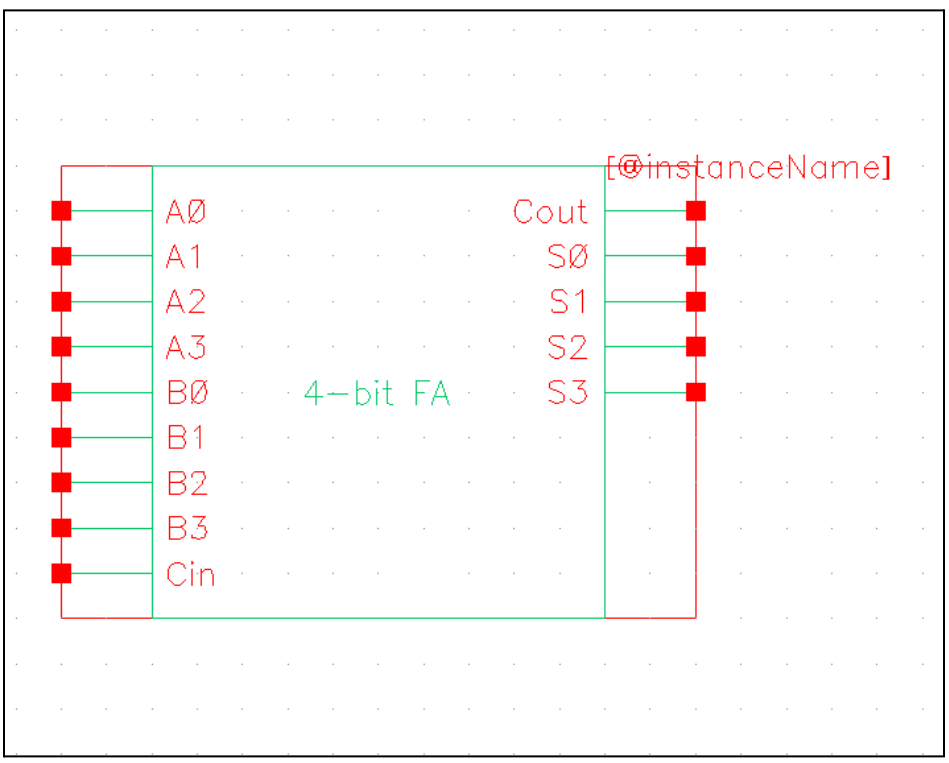

3. Simulation Output & Test Code:

```
simout.tmp
  -f /home/grads/y/yashas1729/4_bit_adder_run1/verilog.inpfiles
    /opt/coe/ncsu/ncsu-cdk-1.6.0.beta/lib/NCSU_Digital_Parts/xor2/functional/verilog.v
    /opt/coe/ncsu/ncsu-cdk-1.6.0.beta/lib/NCSU_Digital_Parts/nand2/functional/verilog.v
    ihnl/cds0/netlist
    ihnl/cds1/netlist
  +nostdout
  +nocopyright
  +ncvlogargs+" -neverwarn -nostdout -nocopyright "
  +ncelabargs+" -neg_tchk  -nonotifier  -sdf_NOCheck_celltype  -access +r  -pulse_e 100  -pulse_r 100  -neverwarn  -timescale 1ns/1ns -nostdout -nocopyright"
  +ncsimargs+" -neverwarn  -nocopyright -gui -input /home/grads/y/yashas1729/4_bit_adder_run1/.simTmpNCCmd "
  +mpssession+virtuoso2414117
  +mpshost+n01-zeus.olympus.ece.tamu.edu
SOFTINCLUDE $SYSTEM_CDS_LIB_DIR/cds.lib
|
ncxlmode: *W,DLCVAR (../cds.lib,1): cds.lib Invalid environment variable ''.
SOFTINCLUDE $SYSTEM_CDS_LIB_DIR/cds.lib
|
ncxlmode: *W,DLCVAR (../cds.lib,1): cds.lib Invalid environment variable ''.
SOFTINCLUDE $SYSTEM_CDS_LIB_DIR/cds.lib
|
ncxlmode: *W,DLCVAR (../cds.lib,1): cds.lib Invalid environment variable ''.
SOFTINCLUDE $SYSTEM_CDS_LIB_DIR/cds.lib
|
ncxlmode: *W,DLCVAR (../cds.lib,1): cds.lib Invalid environment variable ''.
SOFTINCLUDE $SYSTEM_CDS_LIB_DIR/cds.lib
|
ncxlmode: *W,DLCVAR (../cds.lib,1): cds.lib Invalid environment variable ''.

------------------------------------
Relinquished control to SimVision...
ncsim>
ncsim> source /opt/coe/cadence/INCISIVE152/tools/inca/files/ncsimrc
ncsim> database -open shmWave -shm -default -into shm.db
Created default SHM database shmWave
ncsim> probe -create -shm test  -all   -depth 1
Created probe 1
ncsim> run
Time=0, A=0000, B=0000, Cin=0 ,Sum=0000, Carry=0
Time=50, A=1111, B=1111, Cin=0 ,Sum=1110, Carry=1
Time=100, A=0101, B=0101, Cin=1 ,Sum=1011, Carry=0
Time=150, A=1010, B=1010, Cin=1 ,Sum=0101, Carry=1
ncsim>
```

Simout Picture

Calculation at t = 150:

1010

1010

+ 0001 == [0101 with Carry = 1]

We can see that the 4 bit adder's output is correct and matching with the expected results. The simulation tests all the input combinations every 50ns and confirms the results.

simout.tmp | testfixture.verilog

```
// Verilog stimulus file.
// Please do not create a module in this file.


// Default verilog stimulus.

initial
begin
    A0 = 1'b0;
    A1 = 1'b0;
    A2 = 1'b0;
    A3 = 1'b0;
    B0 = 1'b0;
    B1 = 1'b0;
    B2 = 1'b0;
    B3 = 1'b0;
    Cin = 1'b0;

    #50;
    // Test case 2: 4-bit addition 1111 + 1111 + 0
    A0 = 1; A1 = 1; A2 = 1; A3 = 1;
    B0 = 1; B1 = 1; B2 = 1; B3 = 1;
    Cin = 0;
    #50;

    // Test case 3: 4-bit addition 1010 + 1010 + 1
    A0 = 1; A1 = 0; A2 = 1; A3 = 0;
    B0 = 1; B1 = 0; B2 = 1; B3 = 0;
    Cin = 1;
    #50;

    // Test case 4: 4-bit addition 0101 + 0101 + 1
    A0 = 0; A1 = 1; A2 = 0; A3 = 1;
    B0 = 0; B1 = 1; B2 = 0; B3 = 1;
    Cin = 1;
    #50;
end

initial begin
    $monitor("Time=%0t, A=%b%b%b%b, B=%b%b%b%b, Cin=%b ,Sum=%b%b%b%b, Carry=%b",
    $time, A3, A2, A1, A0, B3, B2, B1, B0, Cin, S3, S2, S1, S0, Cout);
end
```

Test Fixture

4 Bit Register

1. Schematic:

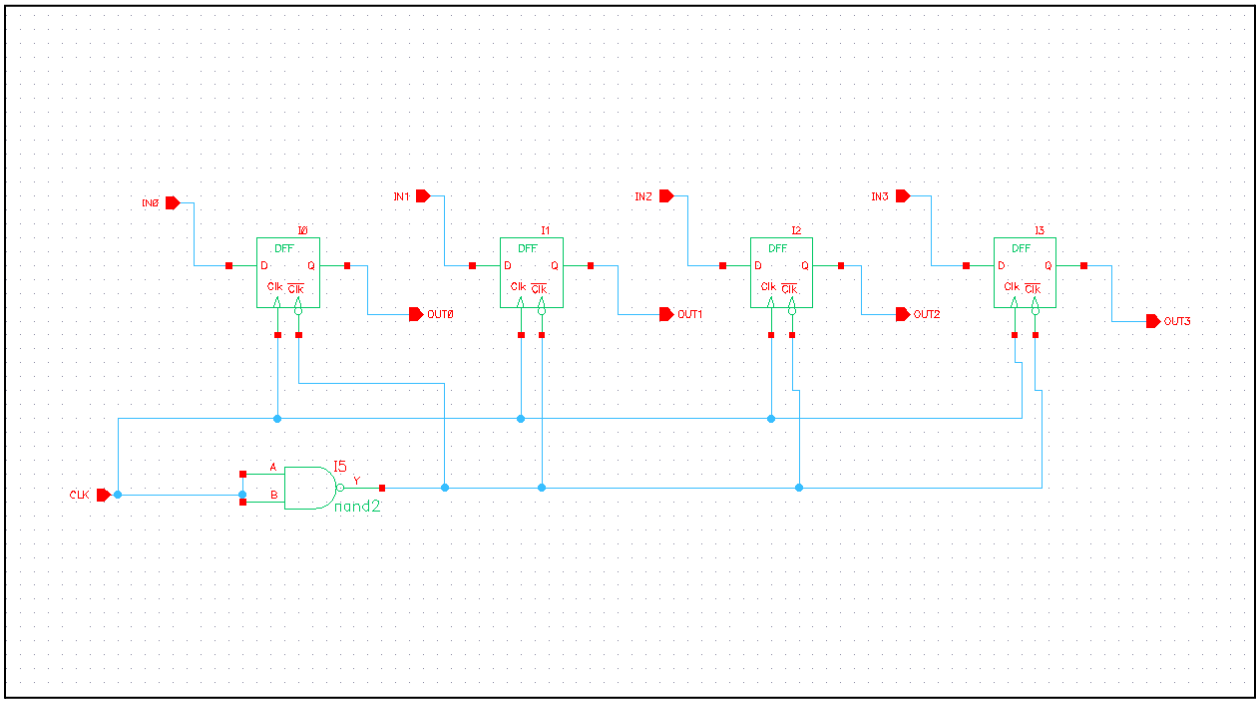

2. Symbol:

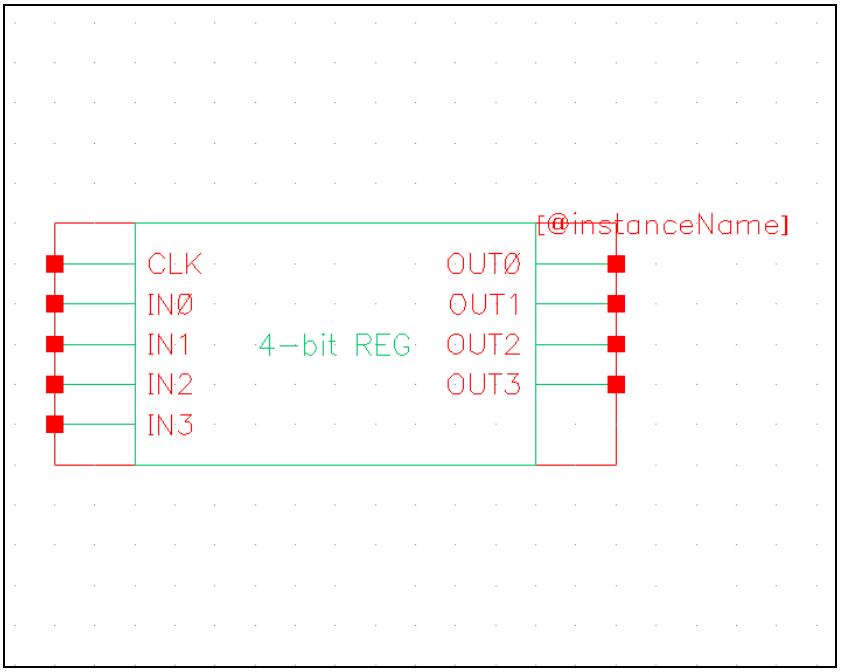

8-Bit Pipelined Adder

1. Schematic:

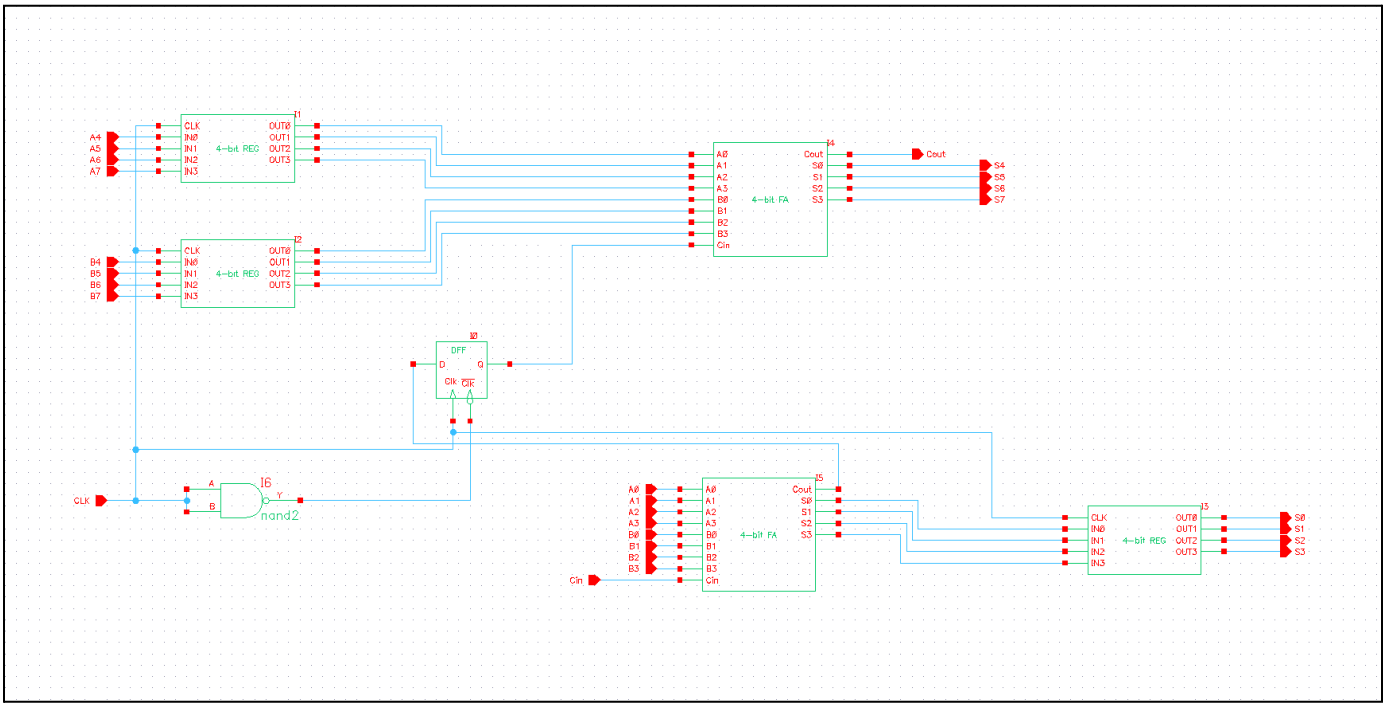

2. Symbol:

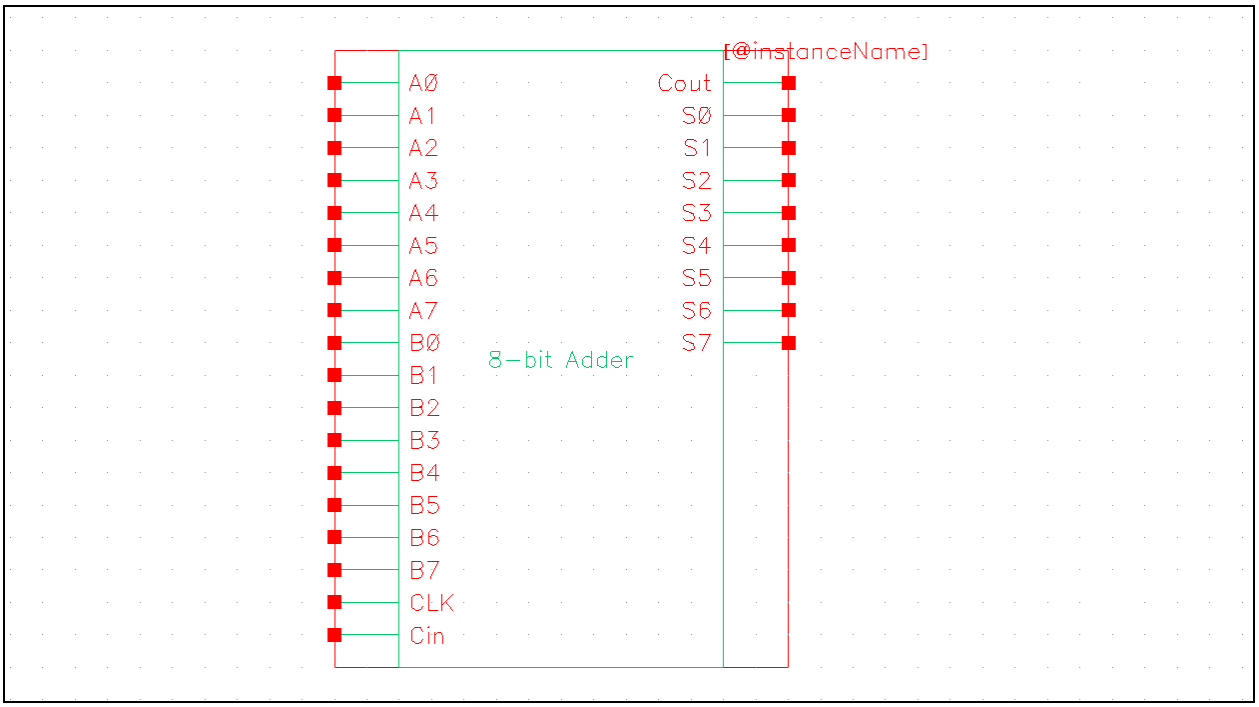

3. Simulation Output:

Test Fixture

testfixture.verilog | simout.tmp

```verilog
// Verilog stimulus file.
// Please do not create a module in this file.

// Default verilog stimulus.

always #5 CLK = ~CLK;

initial
begin
    A0 = 1'b0;
    A1 = 1'b0;
    A2 = 1'b0;
    A3 = 1'b0;
    A4 = 1'b0;
    A5 = 1'b0;
    A6 = 1'b0;
    A7 = 1'b0;
    B0 = 1'b0;
    B1 = 1'b0;
    B2 = 1'b0;
    B3 = 1'b0;
    B4 = 1'b0;
    B5 = 1'b0;
    B6 = 1'b0;
    B7 = 1'b0;
    Cin = 1'b0;
    CLK = 1'b0;

    #10 {A7, A6, A5, A4, A3, A2, A1, A0} = 8'b01111110; {B7, B6, B5, B4, B3, B2, B1, B0} = 8'b11100111; Cin = 0;
    #10 {A7, A6, A5, A4, A3, A2, A1, A0} = 8'b00000000; {B7, B6, B5, B4, B3, B2, B1, B0} = 8'b11111111; Cin = 1;
    #10 {A7, A6, A5, A4, A3, A2, A1, A0} = 8'b10101010; {B7, B6, B5, B4, B3, B2, B1, B0} = 8'b01010101; Cin = 0;
    #10 {A7, A6, A5, A4, A3, A2, A1, A0} = 8'b10101010; {B7, B6, B5, B4, B3, B2, B1, B0} = 8'b01010101; Cin = 1;
    #10 {A7, A6, A5, A4, A3, A2, A1, A0} = 8'b11001100; {B7, B6, B5, B4, B3, B2, B1, B0} = 8'b00110011; Cin = 0;
    #10 {A7, A6, A5, A4, A3, A2, A1, A0} = 8'b11001100; {B7, B6, B5, B4, B3, B2, B1, B0} = 8'b00110011; Cin = 1;
    #10
    $finish;
end

initial begin
    $monitor("Time = %0t, A = %b%b%b%b%b%b%b%b, B = %b%b%b%b%b%b%b%b, Cin = %b, Sum = %b%b%b%b%b%b%b%b, Cout = %b", $time, A7, A6, A5, A4, A3, A2, A1, A0, B7, B6, B5, B4, B3,
 B2, B1, B0, Cin, S7, S6, S5, S4, S3, S2, S1, S0, Cout);
end
```

Simout Picture

MobaTextEditor

File Edit Search View Format Syntax Special Tools

testfixture.verilog | simout.tmp

```
SOFTINCLUDE $SYSTEM_CDS_LIB_DIR/cds.lib
|
ncxlmode: *W,DLCVAR (../cds.lib,1): cds.lib Invalid environment variable ''.
SOFTINCLUDE $SYSTEM_CDS_LIB_DIR/cds.lib
|
ncxlmode: *W,DLCVAR (../cds.lib,1): cds.lib Invalid environment variable ''.
SOFTINCLUDE $SYSTEM_CDS_LIB_DIR/cds.lib
|
ncxlmode: *W,DLCVAR (../cds.lib,1): cds.lib Invalid environment variable ''.
SOFTINCLUDE $SYSTEM_CDS_LIB_DIR/cds.lib
|
ncxlmode: *W,DLCVAR (../cds.lib,1): cds.lib Invalid environment variable ''.
SOFTINCLUDE $SYSTEM_CDS_LIB_DIR/cds.lib
|
ncxlmode: *W,DLCVAR (../cds.lib,1): cds.lib Invalid environment variable ''.
SOFTINCLUDE $SYSTEM_CDS_LIB_DIR/cds.lib
|
ncxlmode: *W,DLCVAR (../cds.lib,1): cds.lib Invalid environment variable ''.

-------------------------------------
Relinquished control to SimVision...
ncsim>
ncsim> source /opt/coe/cadence/INCISIVE152/tools/inca/files/ncsimrc
ncsim> database -open shmWave -shm -default -into shm.db
Created default SHM database shmWave
ncsim> probe -create -shm test  -all   -depth 1
Created probe 1
ncsim> run
Time = 0, A = 00000000, B = 00000000, Cin = 0, Sum = xxxxxxxx, Cout = x
Time = 5, A = 00000000, B = 00000000, Cin = 0, Sum = 00000000, Cout = 0
Time = 10, A = 01111110, B = 11100111, Cin = 0, Sum = 00000000, Cout = 0
Time = 15, A = 01111110, B = 11100111, Cin = 0, Sum = 01100101, Cout = 1
Time = 20, A = 00000000, B = 11111111, Cin = 1, Sum = 01100101, Cout = 1
Time = 25, A = 00000000, B = 11111111, Cin = 1, Sum = 00000000, Cout = 1
Time = 30, A = 10101010, B = 01010101, Cin = 0, Sum = 00000000, Cout = 1
Time = 35, A = 10101010, B = 01010101, Cin = 0, Sum = 11111111, Cout = 0
Time = 40, A = 10101010, B = 01010101, Cin = 1, Sum = 11111111, Cout = 0
Time = 45, A = 10101010, B = 01010101, Cin = 1, Sum = 00000000, Cout = 1
Time = 50, A = 11001100, B = 00110011, Cin = 0, Sum = 00000000, Cout = 1
Time = 55, A = 11001100, B = 00110011, Cin = 0, Sum = 11111111, Cout = 0
Time = 60, A = 11001100, B = 00110011, Cin = 1, Sum = 11111111, Cout = 0
Time = 65, A = 11001100, B = 00110011, Cin = 1, Sum = 00000000, Cout = 1
Simulation complete via $finish(1) at time 70 NS + 0
./testfixture.verilog:36      $finish;
ncsim>
```

C:\Users\YASHAS~1\AppData\Roaming\MobaXterm\slash\Remotel UNIX | Plain text | 71 lines | Row #36 | Col #29

ANNEXURE

- A one-bit full adder is a digital circuit that performs addition of three binary inputs: two operand bits (A and B) and a carry-in bit (Cin) from a previous stage. It produces two outputs: a sum bit (S) and a carry-out bit (Cout).
  The formulas for the same are:
  $S = A \oplus B \oplus Cin$
  $C_{out} = (A \cdot B) + (C_{in} \cdot (A \oplus B))$
  The truth table for the same is

A	B	Cin	Sum (S)	Cout
0	0	0	0	0
0	0	1	1	0
0	1	0	1	0
0	1	1	0	1
1	0	0	1	0
1	0	1	0	1
1	1	0	0	1
1	1	1	1	1

- An 8 bit pipelined adder adds two 8 bit binary numbers by dividing the process into two stages. The flip flops store intermediate values in the form of 4 bit registers, thus ensuring clock synchronized data flow.